BGL001-878 (Rev.001) - Printing detail for Premier 210 (Safety Compliance), United Energy

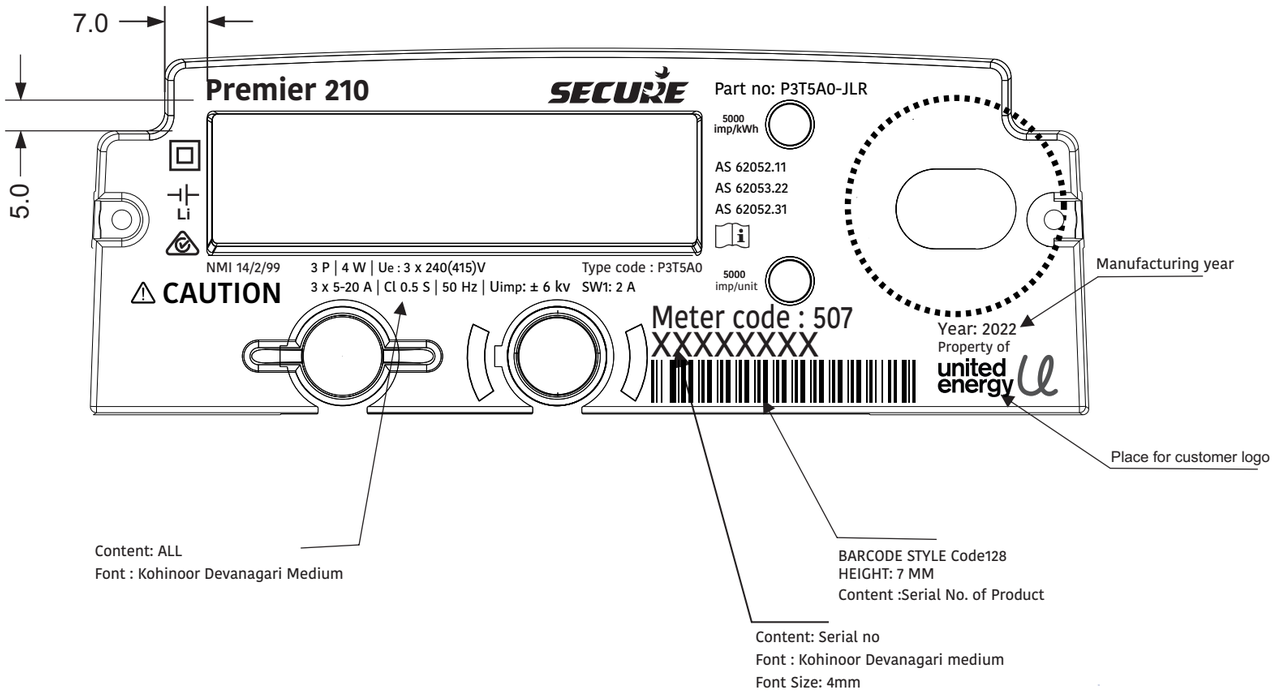

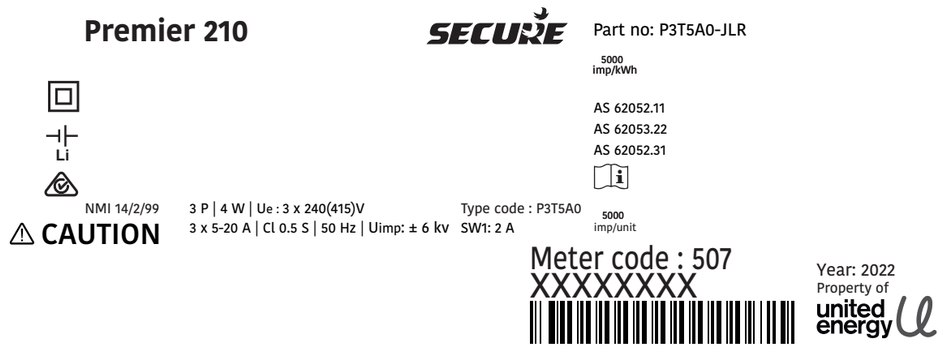

Art work

Scale 1:1

Notes:-

1. Laser marking to be done on name plate (BGD101-360) made of Poly-Carbonate (FR) material.(refer artwork for printing information)
2. Printing color: black or Secure approved equivalent
   (Consistent colour of printing achieved by laser is acceptable after approval from Secure Meters Ltd.)
3. Marking need to be clear and sharpness need to be maintained for the marked matter.
4. General tolerance: ±0.5 mm
5. Artwork needs to be approved prior to sample.
6. After marking, no undesired marks / lines / dust / dirt should be observed.
7. Component should be supplied with a protective film pasted on the front surface to protect it from the scratches during handling.
8. Marking detail should not fade or erase by applying soap water and IPA.
9. Label to be chosen & printing as per Marketing / Purchase order input.
10. Refer soft file for art work.
11. BARCODE standard: code EAN 128 or as per marketing requirement.
12. Variable information -

A) " xxx " is variable information(as per product/customer specific) as per SO.

						Material No:- NA	Material Description:- NA
						Volume:- NA	1. Part (Raw materials, Surface treatments and other secondary operations if any) must be RoHS 2 compliant as per EU directive 2011/65/EU & 2015/863/EU. 2. Part must be REACH compliant as per EU REACH regulation no. 1907/2006.
001	12.01.23	Released BGL001-878 through DCO59513 against SPR01594, with safety compliance for United energy.	RaSh	HSN	HSN	Title :- Printing detail for Premier 210, name plate, safety compliance, United energy	Finish:- NA / C.R. 001
Rev No.	Date	Revision History (ECR/ ECO/DCO)	Drn.by	Chk.by	Appd. by		Drg. No. BGL001-878 / SH1 OF1

Size (Org.) A3	Units : mm	Scale : 1:2	THIRD ANGLE PROJECTION	NPD-MEC-QF-22 Rev No.003	"THIS DOCUMENT IS CONFIDENTIAL AND COPYRIGHT PROPERTY OF SECURE INTERNATIONAL HOLDINGS PTE. LTD AND SHALL NOT BE DIVULGED, REVEALED, REPRODUCED, COPIED (IN WHOLE OR IN PART) OR USED FOR ANY PURPOSE OTHER THAN THAT FOR WHICH SUBMITTED. PLESE ASK IN CASE OF ANY DOUBT".

SECURE SECURE METERS LIMITED
Engineering Drawing